Natural Chemical and Isotopic Tracers to Estimate Fracture Spacing and Surface Area and EGS Systems

Mack Kennedy and H.H. Liu
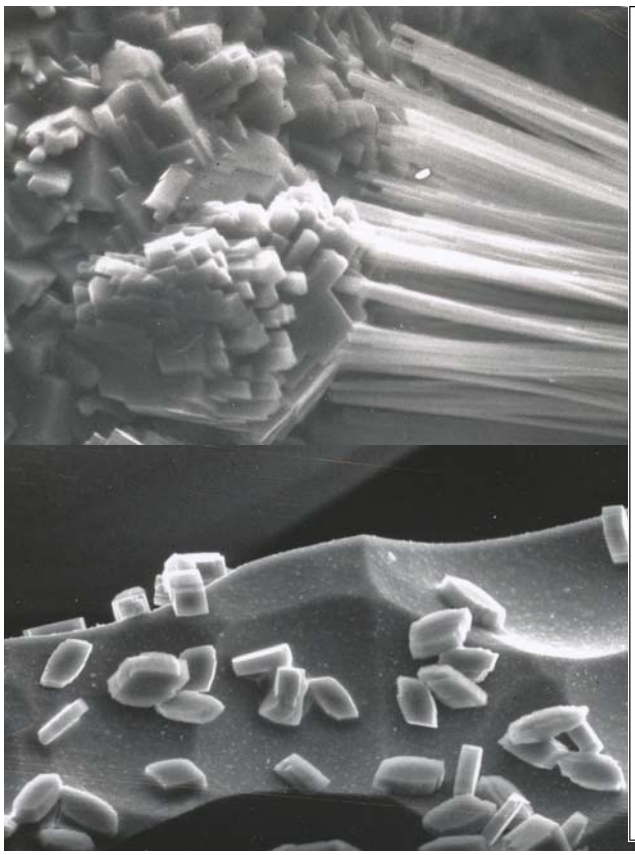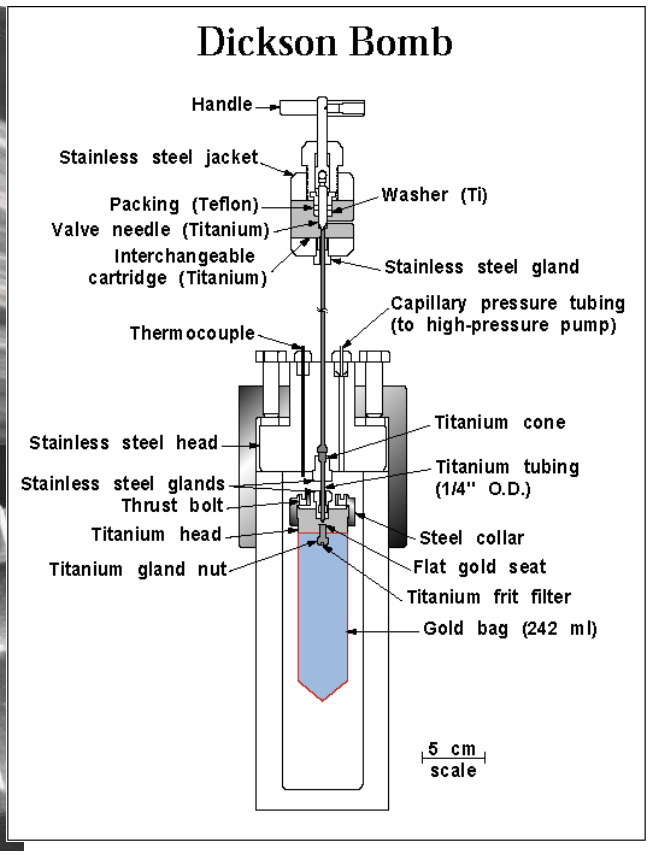
A new technique for estimating the change in fracture surface area induced by well stimulation using natural chemical and isotopic tracers is being developed. Fluids flowing through a newly stimulated fracture network will be out of chemical and isotopic equilibrium with the reservoir mineralogy. Subsequent dissolution and precipitation of minerals will generate solute dependent chemical and isotopic "pulses" that can be monitored at production wells. The shape and duration of a solute specific pulse reflects its bulk reactivity and the amount of fresh fracture surface with which the fluid has interacted, thus providing natural tracers for quantifying the increase in fracture surface area created by well stimulation. The project objectives are to (1) conduct a series of laboratory experiments designed to quantify the reactivity of a suite of natural chemical and isotopic tracers (e.g. Ca, O, H, Sr, Pb, U, Th, noble gases) as a function of fluid chemistry, temperature, surface area and time and (2) incorporate the measured solute reactivities into a tracer analysis model that couples channeled well-to-well flow and reactive transport in a fractured system to estimate the formation and stability of new fracture surface areas available for heat transfer.